Smart Frisking Probe

SFP-100A, SFP-100B, SFP-100C, SFP-100D, SFP-100E

Type: K0935, K0936, K0937, K0938, K0919
Assembly: -03

Instruction for Use

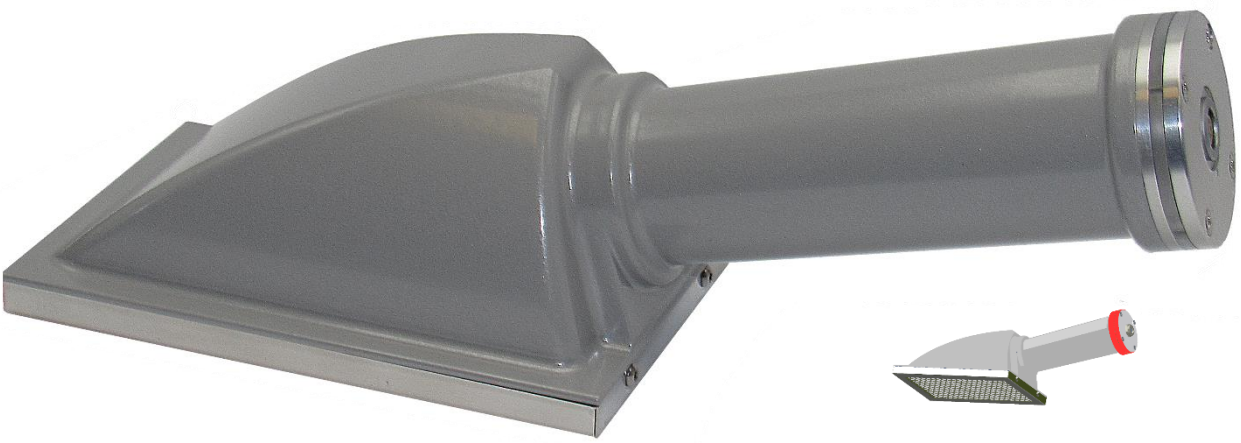

VF, a.s.
Svitavská 588
CZ 679 21 Černá Hora
phone +420 516 428 611
Fax +420 516 428 610
info@vf.eu

Document No.: VF1808300100
revision C
version 03

www.vf.eu

Table of contents

Table of contents 3

List of figures 5

List of tables 6

Foreword 7

1.Introduction 8

1.1. Abbreviations 8

1.2. Terms and definitions 9

1.3. Acts, regulations, standards 11

2.Occupational safety, fire protection and environmental impacts 12

2.1. Occupational safety 12

2.1.1 Safety signs used in VF, a.s. and their meanings 12

2.1.2 Obligations of the operator 12

2.1.3 Qualification requirements for the staff 12

2.1.4 Conditions for the safe operation of the electrical instrument 13

2.2. Fire protection 13

2.3. Environmental impact statement 14

2.4. Instrument disposal 14

3.Technical specifications 15

4.General description 18

4.1. Purpose 18

4.2. Principle of activity 19

4.2.1 Calculation of resulting measured value 19

4.3. SFP-100 series frisking probe specifications 21

4.4. Design layout summary 21

4.4.1 Separation of alpha / beta + gamma radiation in two-channel designs 23

4.4.2 Power supply 23

4.4.3 Output connector 24

5.Before putting the instrument into operation 25

5.1. Transport 25

5.2. Initial preparation 25

5.3. Power supply 25

5.4. Storage 25

5.5. Installation 25

5.6. Monitoring of operability 26

6.Description and setting of parameters 27

6.1. Setting 27

6.1.1 Instrument identification 27

6.1.2 Communication parameters 28

6.1.3 Measurement period 28

6.1.4 RAW data 29

6.1.5 Compensated pulse count per period 29

6.1.6 Medium count rate 30

6.1.7 Status of pulse count and count rate 30

6.1.8 Detector parameters 31

6.1.9 High voltage source 33

6.1.10 Share of dead times 34

6.1.11 Cross-talk 35

6.1.12 Count rate measurement parameters 35

6.1.13 Count rate change detection algorithm 36

6.1.14 Conversion presets 37

6.1.15 Recording in non-volatile memory and main commands 39

7.Maintenance and care 40

7.1. Annual maintenance 40

7.2. Metrological traceability 40

7.3. Photomultiplier (PMT) life cycle 41

8.Troubleshooting 42

8.1. High background level 42

8.2. Possible detector contamination 42

9.Scope of supply 43

9.1. Standard delivery parts 43

9.2. Accessories, additional equipment and associated products delivered separately 43

9.3. Consumable materials 43

10.Warranty conditions 44

11.Annexes 46

Annex A. Graphs of dependence of alarm setting on background 46

Notes 52

List of figures

Fig. 1 SFP-100 frisking probe for contamination measurement 18
Fig. 2 Principal block diagram 20
Fig. 3 Mechanical design of the probe 22
Fig. 4 Probe dimensions (side view) 23
Fig. 5 Probe dimensions (connector side view) 23
Fig. 6 Six-pin frisking probe connector 24
Fig. 7 Photomultiplier 41
Fig. 8 Typical dependence of anode current of the photomultiplier in time 41

List of tables

Tab. 1. EU directives and government regulations 11
Tab. 2 Technical standards 11
Tab. 3 Instrument identification 15
Tab. 4 General specifications 15
Tab. 5 Electrical parameters 15
Tab. 6 Ambient conditions 15
Tab. 7 Probe parameters 16
Tab. 8 Radiometric parameters 17
Tab. 9 Frisking probe connector 24
Tab. 10 Instrument identification 27
Tab. 11 Communication parameters 28
Tab. 12 Measurement period 28
Tab. 13 RAW data 29
Tab. 14 Compensated pulse count per period 29
Tab. 15 Medium count rate 30
Tab. 16 Status of pulse count and rate 30
Tab. 17 Detector parameters 31
Tab. 18 Flags of parameters - RAD_TYPE 31
Tab. 19 Flags of parameters – COMP_SET 32
Tab. 20 Measurement parameters 32
Tab. 21 HV – important parameters 33
Tab. 22 HW power source status 33
Tab. 23 HV – power supply status 34
Tab. 24 Crosstalk 35
Tab. 25 Count rate measurement parameters 35
Tab. 26 Count rate change detection alhorithm 36
Tab. 27 Single entry structure 37
Tab. 28 Preset configuration 37
Tab. 29 Quantity enumerator 38
Tab. 30 Unit enumerator 38
Tab. 31 Recording in non-volatile memory and main commands 39
Tab. 32 Overview of most frequent failures 42
Tab. 33 Standard delivery parts 43
Tab. 34 Accessories, additional equipment and associated products delivered separately 43
Tab. 35 Consumable materials 43

Foreword

Before using the SPF-100 manual probe for contamination measurement, read the instruction manual carefully and follow the instructions step by step.

The information included in these Instructions for Use is the exclusive property of VF and may not be modified, copied or disclosed to third parties in any way without the company's knowledge.

Failure to follow the instructions and safety information contained herein may be considered a breach of warranty conditions and may lead to the termination of the warranty period.

The manufacturer reserves the right to make technical, visual and functional changes without prior notice as part of the manufacturer's efforts for continuous development and improvement of its products.

The Instructions for Use form an integral part of the instrument.

1. Introduction

In combination with a suitable external evaluation unit, the series of frisking probes SFP-100A, SFP-100B, SFP-100C, SFP-100D, SFP-100E is designed to measure surface contamination with radionuclides emitting alpha, beta, gamma radiation.

1.1. Abbreviations

A	Activity
A_s	Surface activity
CMOS	Complementary Metal–Oxide–Semiconductor (IO technology)
CPLD	Gate array
CRM	Certified reference material
DL	Detection limit
DT	Decision threshold
δ	Relative intrinsic error
NPP	Nuclear Power Plant
IR	Ionizing radiation
$k_{1-\alpha}$	Error of the first kind (the instrument indicates a false positive alarm)
$k_{1-\beta}$	Error of the second kind (the instrument indicates a false negative alarm)
N	Pulse count
n	Count rate
PC	Personal computer
PCB (DPS)	Printed circuit board
PLC	Programmable logic controller
PMT	Photomultiplier
$q_{2п}$	Surface emission
R	Instrument response
RF	Response factor
RS-232 (485)	Serial interface
SFP-100	Common identification of type series of manual probes
LV (AL)	Alarm level
SW	Software
UART	Serial interface
USB	Universal Serial Bus
HV	High voltage
ZnS(Ag)	Silver-activated zinc sulphide (scintillation material for the detection of alpha
$\Phi_{2п}$	Instrument efficiency

1.2. Terms and definitions

Activity	A ratio of the mean number of spontaneous radioactive transformations from the given energy level with a certain quantity of radionuclides per unit of time. Unit [Bq].
Sensitive area of the detector	An area of the detector defined by the manufacturer where the efficiency for a small-area CRM is higher than 50 % of the maximum efficiency.
CRM	Material attested by a certificate, one or more properties of which are homogeneous enough and are determined with a sufficient accuracy level to be used for the calibration of the respective instrument. Such properties are certified by a procedure that determines the relationship to the exact implementation of the unit in which the values of the property are expressed and for which every certified value is related to an uncertainty at the stated confidence level.
Count rate	Pulse count over a unit of time. Unit [cps].
Ionizing radiation	Ionizing radiation is capable of ionizing when passing through the substance, it means capable of generating positive and negative ions from the original neutral atoms.
Detection limit	Mean value of the net count rate for which the probability that the measured net count rate is lower than the decision threshold is equal to beta. The beta parameter represents an error of the second kind. Unit [cps].
Effective measurement range	A range of values of the measured quantity where the operating values of the meter or monitor fulfil the conditions imposed by standards applicable to the type of the instrument concerned.
Surface emission	The number of particles of the respective kind emitted from the surface of the radiating source or its active part over a unit of time. Unit [1/s].
Response factor	Reciprocal value of the instrument response. Unit [Bq/cps], [Bq.cm^{-2}/cps].
Coefficient of the error of the first kind	Applies when the actual activity of the measured sample is zero and the instrument indicates contamination.
Coefficient of the error of the second kind	Applies when the actual activity of the measured sample is not zero and the instrument indicates no contamination.
Contamination meter	Instrument designed to measure and analyze surface contamination, providing acoustic as well as visual indication of the count rate. An element to suppress this indication is also available.
Frisking contamination monitor	Instrument designed to measure and analyze surface contamination, providing the above mentioned acoustic signalization of count rate as well as acoustic or visual indication of contamination above a certain set point.
Indirect evaluation of surface contamination	Evaluation of wipable contamination using wipe samples.
Instrument response	Ratio of the corrected count rate of the measuring instrument to activity (surface activity). Unit of response to activity [cps/Bq], for surface activity [cps/Bq.cm^{-2}].
Surrounding background	Radiation field in which the instrument is designed to operate and which includes natural background as well as radiation caused by sources which may be located near the instrument. This can be determined in units {cps, Bq, Bq.cm^{-2}, Gy/h, Sv/h}, depending on instrument type.
Surface activity	Ratio between the activity of the radionuclide present on the surface and the area of such surface. Unit [Bq.cm^{-2}].

PMT	The photomultiplier is an electronic component capable of detecting very weak light signals. When a photon impacts on a sensitive photocathode, the photoelectric effect results in the emission of electrons, which are gradually accelerated by the electric voltage between the individual electrodes (dynodes). The impact of accelerated electrons on the dynodes gives rise to the emission of a larger quantity of electrons (secondary emission), resulting in an amplification of the electron current colliding with the anode. PMTs are widely used in scintillation detectors.
Pulse count	Sum of pulses in the buffer.
Surface contamination	Surface contamination with radioactive substances.
Direct measurement of surface contamination	Measurement of surface activity density using a contamination meter or monitor.
Reference background	Background determined for the simulation of ambient background for which the instrument is designed. The decision threshold and the detection limit are determined for the standard reference background value of 100 nGy/h.
Relative intrinsic error	Relative error of the instrument in respect of the given quantity when exposed to a specific reference radiation level under the specified reference conditions. Expressed in [%].
Decision threshold	Critical value of the statistical test to decide whether the measured count rate for a potentially contaminated person is at the level of the background or whether the measured rate is higher than the background. Unit [cps].
Alarm level	Set value in the instrument, if this set value is exceeded, the instrument triggers the contamination alarm. The contamination alarm is both acoustic and visual. Units usually [cps, Bq, ($Bq.cm^{-2}$), Gy/h, Sv/h].
Instrument efficiency	Ratio of the corrected count rate of the measuring instrument to surface emissions. The unit of response to surface emissions is expressed in [%].
ZnS(Ag)	Zinc sulphide is an inorganic salt of hydrogen sulphide and zinc hydroxide, its formula being ZnS. It is a white crystalline substance insoluble in water like most sulphides. A charged alpha particle transfers energy to the scintillation centers containing silver atoms, which results in the luminescence of ZnS and in the emission of photons at the maximum wavelength of 450 nm.

1.3. Acts, regulations, standards

Specified laws, regulations and standards are valid in the European Union. The instrument meets and follows the directives and government regulations referred to in Tab. 1as well as the harmonized technical standards referred to in Tab. 2.

Identification/year of publication	Name
Directive 2014/35/EU	Safety of Low-Voltage Electrical Equipment
Directive 2014/30/EU	on Electromagnetic Compatibility

Tab. 1. EU directives and government regulations

Designation	Name
EN 61098	Radiation protection instrumentation - Installed personnel surface contamination monitoring assemblies
EN 60325	Instruments of radiation protection – contamination meters and monitors of contamination by radionuclides emitting alpha, beta, alpha/beta radiation (energy > 60 keV)

Tab. 2 Technical standards

2. Occupational safety, fire protection and environmental impacts

2.1. Occupational safety

A summary of measures provided for in the legislation and recommended by the manufacturer, to prevent danger or damage to human health in the working process.

2.1.1 Safety signs used in VF, a.s. and their meanings

Caution, electrical instrument.

Do not dispose of as common waste.

Do not extinguish with either water or foam extinguishers!

Grounding.

Warnings and safety precautions.

Product compliance with EU legislation.

Manufacturer's information, recommendations, and notes.

2.1.2 Obligations of the operator

- The operator is obliged to ensure observation of general safety regulations when working with the instrument.
- Before instrument commissioning, the operator is obliged to define the competences of persons for the operation, service, cleaning, regular maintenance, setting and adjustment to provide for and maintain the proper functioning of the instrument and the safety of persons and property.

2.1.3 Qualification requirements for the staff

The instrument may only be installed by a person familiar with the operational, safety and any other regulations relating to industrial safety in force in the place, where the instrument is to be located or otherwise associated with the place of work. Electric systems may only be installed and connected by a person qualified in compliance with the applicable legislation of the country of operation of the instrument.
The instrument may only be opened, adjusted and set up by persons who are physically and mentally fit, older than 18 years of age, demonstrably trained by their parent organization in the respective work and familiar with the Instructions for Use, which shall be kept in an accessible place.

2.1.4 Conditions for the safe operation of the electrical instrument

- Keep the safety labels, symbols and notices on the instrument legible.
- Follow the relevant regulations for health and safety at work and the valid local standards laying down the conditions for the wiring of electrical equipment and for its safe and reliable operation.
- Installation, operation and maintenance may only be provided by persons qualified for such activities in compliance with the valid legislation of the country of operation of the instrument.
- Perform inspections of electrical equipment on a regular basis as required by the internal rules of the organization or by applicable standards or guidelines of the manufacturer. Inspections may only be performed by persons qualified for carrying out such activities in compliance with the legislation of the country in which the instrument is operated.
- All activities related to electrical installations must be performed in compliance with the Instructions for Use.
- If you find a defect or damage that could jeopardize health and safety at work, do not use the instrument and inform the operating organization without delay.

Any intervention in the design of the instrument IS NOT ALLOWED.

Maintenance, cleaning and repairs of the instrument may only be performed with power supply disconnected and with the associated technological equipment turned off.

The Instructions for Use must be available to all staff in charge of installation, operation, and maintenance of the electrical instrument at all times.

2.2. Fire protection

The instrument and its operation do not increase the fire risk.

CAUTION, electrical instrument. Do not use water neither foam extinguishers.

2.3. Environmental impact statement

The instrument as such and its operation do not cause an environmental load.

2.4. Instrument disposal

When disposing of the instrument after expiration of its life, you must follow the applicable local legislation[1].

The company VF, a.s. participates in the collective take-back system RETELA of the manufacturers of electrical instruments. For more information on RETELA please visit http://www.retela.cz/ (http://www.weee-forum.org/).

[1] In the Czech Republic, proceed in accordance with Act No. 185/2001 Coll., on Waste, as amended, and the related decrees of the Ministry of the Environment.

3. Technical specifications

The parameters of manual probes are described in detail in a separate document Radiometric parameters K0935-01-BT01, which forms an integral part of the Instructions for Use.

Instrument identification	
Marketing name	Smart frisking probe
Product label	SFP-100x
Type	K0935-03, K0936-03, K0937-03, K0938-03, K0919-03
Manufacturer	VF, a.s. Černá Hora

Tab. 3 Instrument identification

General specifications	
Dimensions (W x H x D)	(100 x 100 x 270) mm
Weight	0.7 kg
Degree of protection	IP 20

Tab. 4 General specifications

Electrical parameters	
Supply voltage	+5 V DC (4.75 ÷ 5.25) V DC
Input power	0.5 VA
Output connectors	D 103 A056-130
Communication interface	UART at voltage levels 5 V CMOS, 57,600 Bd
Pulse output	Pulse width 2 µs at voltage levels 5 V CMOS

Tab. 5 Electrical parameters

Ambient conditions	
Operating temperature range	(+ 5 ÷ + 35)°C
Operating relative humidity	max. 80 %, non-condensing
Operating pressure	(86 ÷ 106) kPa

Tab. 6 Ambient conditions

SFP-100 manual probe		
Radiation detected	SFP-100A: Alpha SFP-100B: Alpha + beta in one channel SFP-100C: Alpha / beta in two channels SFP-100D: Alpha + beta + gamma in one channel SFP-100E: Alpha / beta + gamma in two channels	
Scintillators	SFP-100A: ZnS(Ag) 3.25 mg·cm^2 on acrylic glass 1.5 mm thick SFP-100B: plastic scintillator of 0.25 mm thickness SFP-100C: ZnS(Ag) 3.25 mg·cm^2 on a plastic scintillator 0.25 mm thick SFP-100D: plastic scintillator of 5 mm thickness SFP-100E: ZnS(Ag) 3.25 mg·cm^2 on a plastic scintillator 5 mm thick	
Photomultiplier	25 mm diameter with hemispheric window	
High voltage source	(400 ÷ 1,000) V with sensitive current limitation	
Active area	100 cm^2 (130 x 77) mm	
Window	Plated light-tight foil (3 x 0.29) mg/cm^2	
Protective grid	Hexagonal grid, transmittance 74%	
Dead time	Automatically compensated. Separate individual channels typically 4.5 µs. For the two-channel design, dead time on the beta channel after detection on the alpha channel typically 780 µs.	
Cross talk of alpha radiation to the beta channel	Max. 20 % for ^{241}Am, with 59 keV gamma radiation compensation.	
Pulse count measurement	Number of pulses over a time period adjustable in the range of (0.1 ÷ 10) s in 0.1 s steps. Adjusted for dead time.	
Mean count rate measurement	Mean with variable time constant based on pulse count. The maximum contamination measurement time is automatically reduced when the required pulse count is received. The initial settings meet the requirements of ČSN EN 60325. Initial settings:	
	Basic counting period	1 s
	Minimum measurement time	2 s
	Maximum measurement time	30 s
	Required pulse count	1,000

Tab. 7 Probe parameters

Radiometric parameters				
Measured quantity	Count rate, activity / surface activity			
Relative intrinsic error	±25%			
Measurement range	Frisking probe	Measurement range		Response at background 100 nGy/h
	SFP-100A	4 cps to 100 kcps		< 0.1 cps
	SFP-100B	6 cps to 100 kcps		< 8 cps
	SFP-100C (alpha)	4 cps to 100 kcps		< 0.1 cps
	SFP-100C (beta)	6 cps to max. 100 kcps[1]		< 8 cps
	SFP-100D	15 cps to 100 kcps[2]		< 50 cps
	SFP-100E (alpha)	4 cps to 100 kcps		<0.1 cps
	SFP-100E (beta + gamma)	15 cps to max. 100 kcps		< 50 cps
	[1,2]The alpha channel has priority over the beta channel. When alpha radiation is detected, the measuring range is automatically reduced on the beta channel. With count rates above approx. 1,000 cps on the alpha channel, the beta channel does not measure any more. Overload is always indicated in the status word.			
Reference radionuclide	Alpha radiation ^{241}Am (^{239}Pu), beta radiation ^{36}Cl (^{204}Tl).			
Typical response	SFP-100 (A, B, D, E)		SFP-100C	
	^{241}Am	^{36}Cl	^{241}Am	^{36}Cl
	0.21 cps/Bq	0.32 cps/Bq	0.21 cps/Bq	0.23 cps/Bq
Overload capacity	Particle fluence corresponding to 100 times the maximum of the measurement range.			
Homogeneity	The response variation depending on the source position does not drop under 25% against the maximum response in the center of the detector.			

Tab. 8 Radiometric parameters

The parameters are described in detail in the separate document Radiometric parameters of SFP-100 (Document: VF1705170004)

4. General description

4.1. Purpose

In combination with a suitable external evaluation unit, the series of instruments SFP-100A, SFP-100B, SFP-100C, SFP-100D, SFP-100E is designed to measure surface contamination with radionuclides emitting alpha, beta, gamma radiation. Its basic characteristics include a gasless design based on scintillation detectors, high efficiency of detection and compact size. The instrument complies with the basic requirements of European standards EN 60325 and EN 61098.

Fig. 1 SFP-100 frisking probe for contamination measurement

Surface contamination monitor

When connected to the FCM-11 display unit, the assembly can serve as a wall-mounted contamination monitor. FCM-11 with SFP-100 series probes is designed for measuring and indicating surface contamination typically when the workers leave controlled radiation areas.

Portable contamination monitor

The portable surface contamination monitor comprises the Radcount-2S display unit and SFP-100 series frisking probes interconnected by cables.

Additional frisking probe for other equipment

SFP-100 series probes can be connected to other equipment and serve as additional contamination probes:

- HF series hand-foot contamination monitors.
- HM-4 series hand contamination monitors.
- Tools and materials contamination monitor MCM-300.

The whole series of instruments has a unified design. The different types of instruments differ from each other by the scintillator used and the settings. Consult any connection to the products above with the manufacturer.

4.2. Principle of activity

A spherical photomultiplier converts the light from scintillator to an electrical signal. The photomultiplier is protected against light overload in case of impairment of the detector light-tightness. The structure of feeding circuits of photomultiplier ensures excellent linearity even by high count rates together with low idle power input.

The count rates are counted numerically by means of a low-power sixteen-bit processor in combination with a complex programmable logic device (CPLD). The alpha / beta + gamma distinction for two-channel versions is based on pulse shape discrimination.

The instrument contains a set of algorithms, which ensure that the effects of dead times are suppressed. In two-channel designs, algorithms suppress the influence of alpha radiation on the beta channel.

The measurement results are available via data communication on an asynchronous serial line with CMOS 5 V levels. The measured quantity is the pulse count during the selected sampling time and the mean count rate in the channel.

An additional instrument output is the direct transmission of detected pulses in the form of time-shaped electrical pulses at CMOS 5 V levels. This output is intended for acoustic signalization of detected pulses. The pulse output is not adjusted to dead times.

The instrument is equipped with a red and green LED signalling ring that can be controlled via data communication from the higher-level system. These LED units are typically used to signal the currently measured contamination level. Red color indicates that the alarm level has been exceeded and green color shows that the measured value is below the alarm set point.

4.2.1 Calculation of resulting measured value

The calculation of resulting value is a question of the higher-level system according to the needs of the application. The instrument only provides information by which the higher-level system calculates necessary results.

4.2.1.1. Higher-level system reads pulses

If the higher-level system reads the pulse count from the detector over the sampling period, it must perform an adjustment for cross-talk in channel 1 in case of the two-channel detector. The pulse count is calculated as follows:

$$COUNT_1 = RES_DT_VAL_1 - CROSSTALK \cdot RES_DT_VAL_2$$

where *CROSSTALK* is the constant cross-talk from channel 2 in channel 1 [-], saved in the instrument.

For greater pulse counts (hundreds of pulses over a period) this adjustment can be performed with a whole-number result; for smaller pulse counts, however, it must be performed with floating decimal point.

4.2.1.2. Higher-level system reads count rates

The resulting value *Value* is calculated in the default condition from the count rate (ID 3Ah, 3Bh) as:

$$VALUE_1 = PRESET_RF_1 \cdot \left(RES_RATE_VAL_1 - BG_1\right)$$

$$VALUE_2 = PRESET_RF_2 \cdot \left(RES_RATE_VAL_2 - BG_2\right)$$

where

PRESET_RF_x is the sensitivity constant [UNIT/cps] that can be saved in the instrument

BG_1 is the background of channel 1 [cps] read prior to the measurement as such.

BG_2 is the background of channel 2 [cps] read prior to the measurement as such.

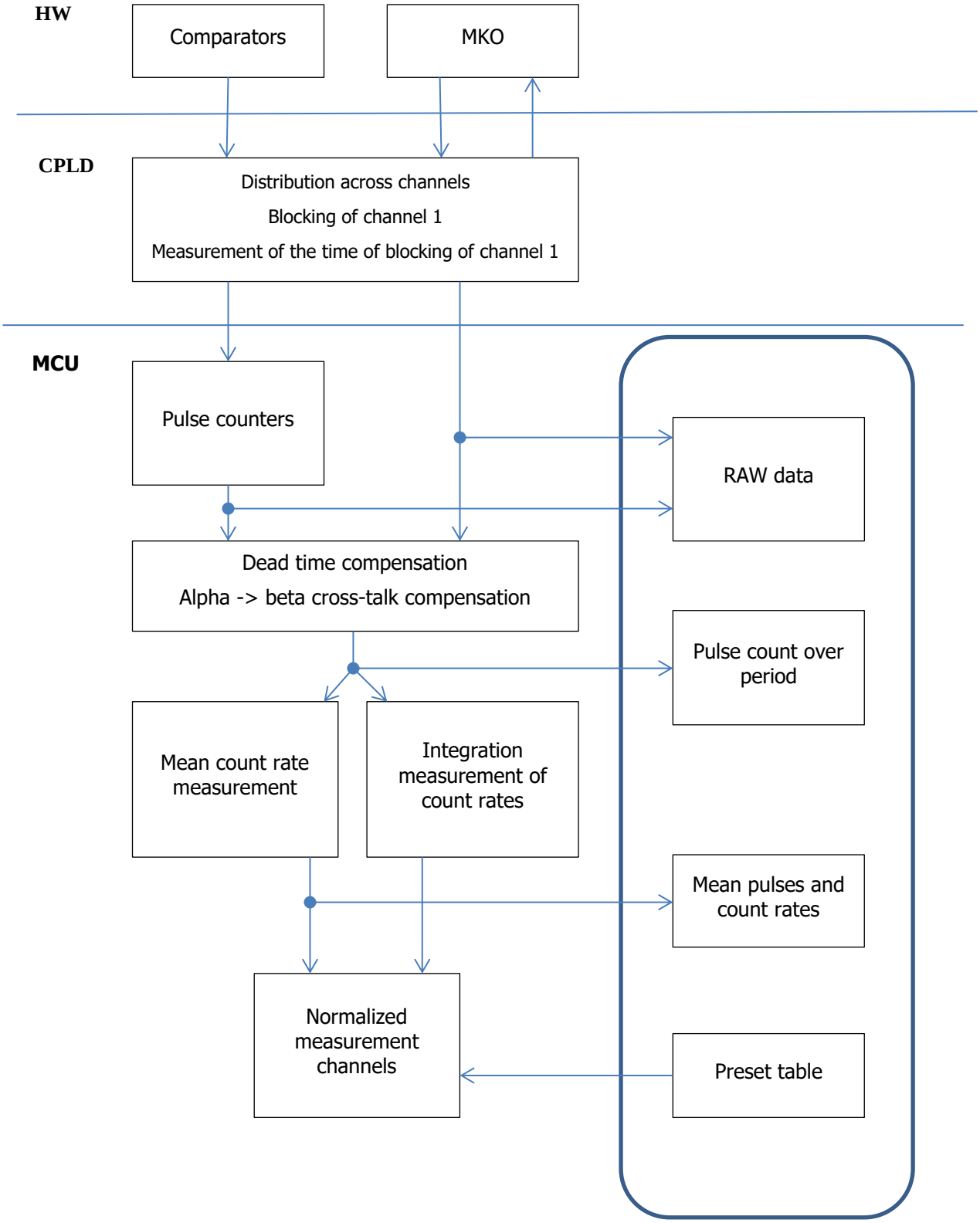

Fig. 2 Principal block diagram

4.3. SFP-100 series frisking probe specifications

SFP-100A is a single-channel instrument optimized to measure alpha radiation emitting radionuclides. The scintillation material ZnS(Ag) applied on a plate of acrylic glass is the radiation detector.

SFP-100B is a single-channel instrument optimized to measure alpha and beta radiation emitting radionuclides. The radiation detector is a very thin plastic scintillator.

SFP-100C is a two-channel instrument optimized for selective measurement of radionuclides emitting beta radiation in the first channel and the measurement of radionuclides emitting alpha radiation in the second channel. The scintillation material ZnS(Ag) applied on a very thin plastic scintillator is the radiation detector.

SFP-100D is a single-channel instrument optimized to measure alpha, beta and gamma radiation emitting radionuclides. The radiation detector is a plastic scintillator.

SFP-100E is a two-channel instrument optimized for selective measurement of radionuclides emitting beta and gamma radiation in the first channel and the measurement of radionuclides emitting alpha radiation in the second channel. The scintillation material ZnS(Ag) applied on a plastic scintillator is the radiation detector.

4.4. Design layout summary

Mechanical design

The instrument case is made of light metal. It consists of the probe body and a hand grip. A scintillation detector, protected by a aluminium light-tight foil and a metal grid, is placed in a rectangular frame. A photomultiplier and electronic components are installed in the handle. The photomultiplier is directly soldered to the printed circuit board. The electronics is on two interconnected printed circuit boards. The connector for connecting the power supply and communication cable is led out from the handle. In the handle there is LED visual signalization that lights green or red according to the current level during continual evaluation of contamination.

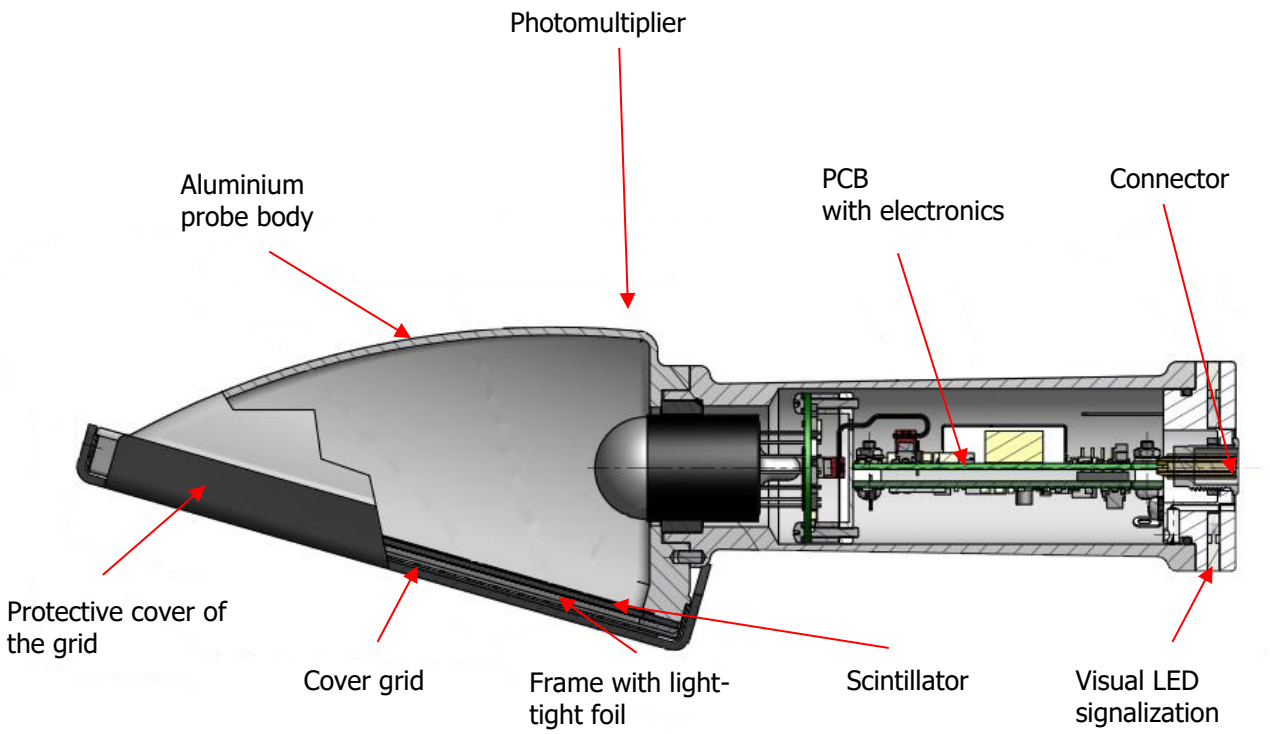

Fig. 3 Mechanical design of the probe

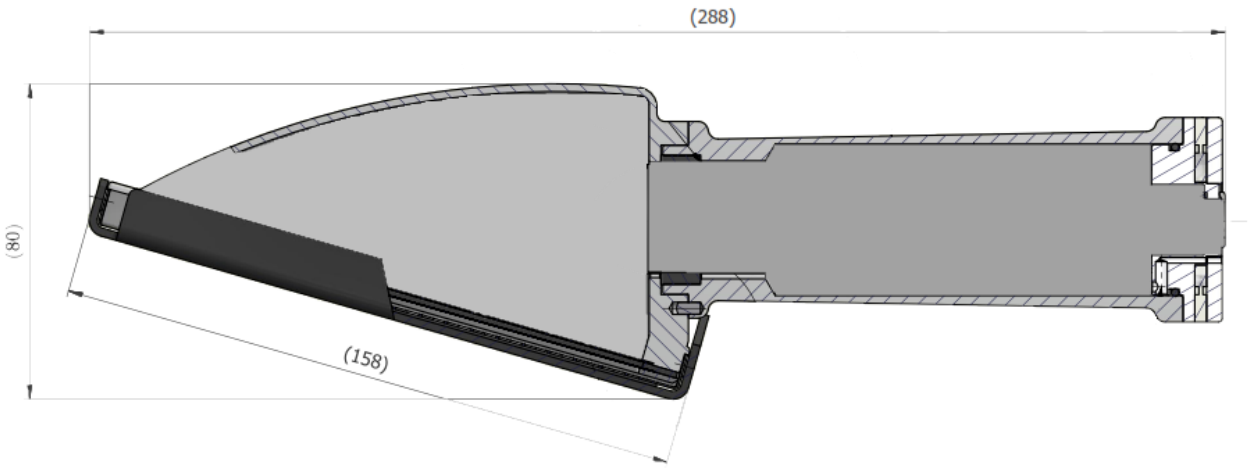

Fig. 4 Probe dimensions (side view)

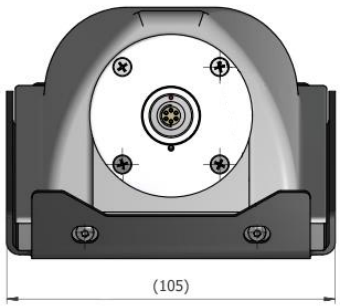

Fig. 5 Probe dimensions (connector side view)

Electrical design

The electronics is made up of interconnected PCBs with photomultiplier, HV source and with control and evaluation electronics.

4.4.1 Separation of alpha / beta + gamma radiation in two-channel designs

Separation uses the method of shape pulse discrimination based on different periods of lighting of individual scintillators. This separation method achieves the significantly better separation results than the separation principle based on amplitude discrimination.

At the moment of alpha radiation detection, the beta channel is blocked. The blocking period is measured and it is used to correct the dead periods of beta channel.

4.4.2 Power supply

The instrument is powered by +5 V DC voltage from the input connector, see 4.4.3

4.4.3 Output connector

The output connector is type D 103 A056-130 by Fischer Connectors. The connector on the connecting cable is type S 103 A056-130+. Signal distribution is shown in the following table.

Pin number	Signal	Description
1	GND	Power supply ground and probe grounding
2	+5 V	Supply voltage
3	Tx	Data sent from the probe
4	Rx	Data received to the probe
5	IMP-1	Pulses from channel 1
6	IMP-2	Pulses from channel 2

Tab. 9 Frisking probe connector

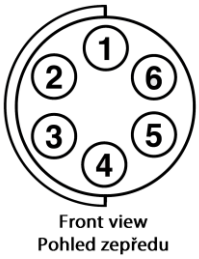

Fig. 6 Six-pin frisking probe connector

UART signals are used to communicate with the probe via standard asynchronous serial line, voltage level 5 V CMOS.

Pulse outputs IMP-1 and IMP-2 are intended for control of the pulse detection acoustic indication generator. The outputs are formed by a circuit with voltage levels 5 V CMOS.

5. Before putting the instrument into operation

Avoid contact of sharp objects with the sensitive area of the frisking probe. The plated light-tight aluminium foil can be damaged through the protective grids, with the subsequent possible damage to the photomultiplier.

5.1. Transport

The instrument SHALL NOT be exposed to mechanical shocks and bumps, in particular, harmless to the photomultipliers used in manual probes.

- The instrument is transported assembled and ready for use.
- During transportation, secure the instrument against movement and damage.

5.2. Initial preparation

- Remove the instrument from the transportation package.
- Check the delivery for completeness in accordance with section 9.1.
- Check all components of the delivery for mechanical damage.

In case you find any defects during the initial preparation, provide for their repair before the instrument is connected to the higher-level system.

5.3. Power supply

The instrument uses the supply voltage of + 5 V DC from the connector.

5.4. Storage

- Store the instrument at the temperature of (0 ÷ +40) °C, relative humidity max. 80 % non-condensing, no longer than for 3 months without turning on.
- Store the instrument in conditions eliminating any mechanical damages.
- Avoid contact with water, chemicals and/or rain.
- During storage, protect the instrument against dust.

5.5. Installation

- The installation shall be performed by the manufacturer, trained service organization, or the user's staff trained by the manufacturer.
- Electric part of the instrument may only be installed and connected by a person qualified in compliance with the applicable legislation of the country of instrument operation.

The instrument is connected to the higher-level system via the cable (see section 4.4.3) with the connector.

5.6. Monitoring of operability

- After connecting the frisking probe to a higher-level system, such as FCM-11, hand monitor, hand foot monitor, the probe starts sending response in cps against background. If alarm levels are set in the instrument, their breach can be tested using a surface source (see section 3 or adequate). If you use the probe in connection with a PC, use the VF-Setup program and proceed as shown in section 6. The VF-Setup program allows to show cps from the probe, set the alarm levels, measure the plateau, etc.

6. Description and setting of parameters

Parameters of SFP-100 manual probes can be read, set up or changed according to the permissions set by the VF-Setup service application, S0506-25.

6.1. Setting

The setting is recommended using the VF-Setup S0506-25 program. With this program, you can easily set parameters, measure response, measure detector plateau, set work points, and perform long-term measurements using parameter logging.

- Connect the probe to the PC.
- Run the **VF-Setup.exe** program. Follow the instructions for this program.
- Choose the language using the drop-down menu.
- Set the appropriate COM port and baud rate to 56,700 Bd.
- Load the "xxx_Root.xml" root file.
- Use the recommended values in section 3 to set the detector working point.
- To save parameter changes permanently, it is necessary to save them using the “Commands” button.

6.1.1 Instrument identification

ID	Parameter	Default value	Unit	Description	Rights
0000	HW_ID			HW identification.	RO
0002	SW_ID			FW identification.	RO
0004	SW_VER			FW version.	RO
0006	SER_NO			Serial number.	RO
0008	PR_ID			Product assembly number.	RO
0010	PR_VER			Design version.	RO
0018	PR_NAME			Abbreviated product name.	RO

Tab. 10 Instrument identification

6.1.2 Communication parameters

ID	Parameter	Default value	Unit	Description	Rights
0086	DEV_ADDR_MY	0x0001		Instrument communication address.	RW
0087	DEV_UART_SPEED	57,600	Bd	Baud rate of the asynchronous serial line. The alteration will take effect after restarting.	RW
008A	DEV_ADDR_SEND	0x0002		Communication address for automatic data sending.	RW
008B	SEND_IDENT	0x0080		Required identifier of the automatic data sending transaction.	RW
008C	SEND_REG_ADDR	0x00EA		Address of the first register in RO for automatic data sending. The pulse counts over a period of time are compensated here.	RW
008D	SEND_REG_CNT	12		Number of registers for automatic sending.	RW
008E	SEND_REG_ONCH	0x00EA		The RO register the alteration of which initiates automatic data sending.	RW
008F	SEND_TIME_MIN	0	ms	The time from the last alteration detection where detection of further alterations is blocked (minimum period of data sending).	RW

Tab. 11 Communication parameters

6.1.3 Measurement period

The basic pulse reading time is 100 ms. The parameter **SP** determines the number of 100 ms periods that are automatically summed up and form the basic measurement period. If set, at the same time, the selected measurement data are automatically sent in this interval to the higher-level system.

ID	Parameter	Default value	Unit	Description	Rights
0089	PERIOD	10	100 ms	Measurement period.	RW

Tab. 12 Measurement period

6.1.4 RAW data

RAW data are used to monitor the data as close to the HW as possible before the adjustment, especially for fine-tuning purposes. They are a source of information for all subsequent calculations. The pulse count is not compensated for dead times and cross-talk.

ID	Parameter	Default value	Unit	Description	Rights
00DE	RES_DT_INDEX_1			Value index, increments always with the new value.	RO
00DF	RES_DT_STATUS_1			Status of the value of pulse count per period, channel 1.	RO
00E0	RES_DT_T_RAW_1		ms	Reading time.	RO
00E2	RES_DT_VAL_1			Whole-number pulse count per period, channel 1.	RO
00E4	RES_DT_INDEX_2			Value index, increments always with the new value.	RO
00E5	RES_DT_STATUS_2			Status of the value of pulse count per period, channel 2.	RO
00E6	RES_DT_T_RAW_2.)		ms	Reading time.	RO
00E8	RES_DT_VAL_2			Whole-number pulse count per period, channel 2.	RO

Tab. 13 RAW data

6.1.5 Compensated pulse count per period

Pulse count is compensated for dead times and cross-talk from channel 2 to channel 1.

ID	Parameter	Default value	Unit	Description	Rights
00EA	RES_DT_CROSS_INDEX_1			Value index, increments always with the new value.	RO
00EB	RES_DT_CROSS_STATUS_1			Status of the value of pulse count per period, channel 1.	RO
00EC	RES_DT_CROSS_T_RAW_1		ms	Reading time.	RO
00EE	RES_DT_CROSS_VAL_1			Pulse count per period, compensated for dead times and cross-talk, channel 1.	RO
00F0	RES_DT_CROSS_INDEX_2			Value index, increments always with the new value.	RO
00F1	RES_DT_CROSS_STATUS_2			Status of the value of pulse count per period, channel 2.	RO
00F2	RES_DT_CROSS_T_RAW_2		ms	Reading time.	RO
00F4	RES_DT_CROSS_VAL_2			Pulse count per period, compensated for dead times and cross-talk, channel 2.	RO

Tab. 14 Compensated pulse count per period

6.1.6 Medium count rate

Medium count rate is the basic output of the instrument. The pulse count is compensated for dead times. In case of two-channel detectors it is compensated for cross-talk from channel 2 to channel 1. The count rate calculation algorithm is parametrized, see section 0.

ID	Parameter	Default value	Unit	Description	Rights
00F6	RES_RATE_INDEX_1			Value index, increments always with the new value.	RO
00F7	RES_RATE_STATUS_1			Count rate status, channel 1.	RO
00F8	RES_RATE_T_RAW_1		ms	Reading time.	RO
00FA	RES_RATE_VAL_1		cps	Count rate compensated for dead times and cross-talk, channel 1.	RO
00FC	RES_RATE_INDEX_2			Value index, increments always with the new value.	RO
00FD	RES_RATE_STATUS_2			Count rate status, channel 2.	RO
00FE	RES_RATE_T_RAW_2		ms	Reading time.	RO
0100	RES_RATE_VAL_2		cps	Count rate compensated for dead times and cross-talk, channel 2.	RO

Tab. 15 Medium count rate

6.1.7 Status of pulse count and count rate

The status used for the pulse count and count rate is unified in the following form. The specific completion is defined in algorithms. Only bits meaningful in the given algorithm are used.

Definitions of status bits for pulse and rate values

Bit	Designation	Description
0	NACH	Non-active channel.
1	ERR	Error (any).
2	INIT	Measurement initialization.
3	TEST	Test, value influenced by the test signal (blanker, …).
4	BMR	Value below measurement range.
5	AMR	Value above measurement range
6	NCV	Informative value.
7	INV	Invalid value.
8	NR	Measurement not in progress (suspended or finished).
9	TO	Pulse timeout.
10	HVOC	HV power source overload.
11	DIS	Detector disconnected.
12-15	-	Reserved for future use.

Tab. 16 Status of pulse count and rate

6.1.8 Detector parameters

Basic settings of the detector

ID	Parameter	Default value	Unit	Description	Rights
00DF	CROSSTALK	5.000E-01		Cross-talk from channel 2 into channel 1.	RW
00E1	TIMEOUT	10.0	s	Pulse timeout, 0 means no evaluation.	RW
00E3	LLD1	40	mV	Lower discrimination voltage for the channel 1 counter.	RW
00E4	LLD2	80	mV	Lower discrimination voltage for the channel 2 counter.	RW
00E5	COMP_SET	7: Shape 1,2		Discriminator settings. Description of flags is given below	RW
00F6	RAD_TYPE_1	2: Beta		Radiation detected in channel 1. Description of flags is given below	RW
00F7	DT_1	4.500E-06	s	Dead time in channel 1.	RW
00F9	DTR_MAX_1	50.0	%	Maximum dead time ratio in channel 1 measurement.	RW
00FB	RATE_MAX_1	1.000E+05	cps	Maximum count rate in channel 1.	RW
010A	RAD_TYPE_2	1: Alpha		Radiation detected in channel 2. Description of flags is given below	RW
010B	DT_2	4.500E-06	s	Dead time in channel 2.	RW
010D	DTR_MAX_2	50.0	%	Maximum dead time ratio in channel 2 measurement.	RW
010F	RATE_MAX_2	1.000E+05	cps	Maximum count rate in channel 2.	RW

Tab. 17 Detector parameters

Description of flags of parameters RAD_TYPE - detected radiation

Value	Description
0	Not defined
1	Alpha
2	Beta
3	Alpha + beta
4	Gamma
6	Beta + gamma
7	Alpha + beta + gamma

Tab. 18 Flags of parameters - RAD_TYPE

Description of flags of parameters COMP_SET – discriminator settings

Value	Description	Channel 1	Channel 2
0	Off.	Off.	Off.
1	Simple counter 1	Counts pulses with an amplitude greater than LLD1.	Off.
2	Simple counter 2	Off.	Counts pulses with an amplitude greater than LLD2.
3	Window counter 1, simple 2	Counts pulses with an amplitude greater than LLD1 which do not exceed LLD2.	Counts pulses with an amplitude greater than LLD2.
7	Two-channel mode with shape discrimination	Counts pulses with an amplitude greater than LLD1, not included in channel 2.	Counts pulses with an amplitude greater than LLD2 and at the same time with a time lasting longer than the time defined at HW level.
9	Window counter 1	Counts pulses with an amplitude greater than LLD1 which do not exceed LLD2.	Off.
11	Simple counters 1, 2	Counts pulses with an amplitude greater than LLD1.	Counts pulses with an amplitude greater than LLD2.

Tab. 19 Flags of parameters – COMP_SET

Measurement parameters

ID	Parameter	Default value	Unit	Description	Rights
011E	T_MIN	3.0	s	Minimum measurement time. Condition PERIOD/10 ≤ T_MIN ≤ T_MAX.	RW
0120	T_MAX	30.0	s	Maximum measurement time. Condition PERIOD/10 ≤ T_MIN ≤ T_MAX.	RW
0122	N_REQ	1,000		Required pulse count.	RW
0124	CH_T	0.0	s	Measurement time to evaluate count rate alterations. No evaluation if zero.	RW
0126	CH_N_MIN	100		Minimum pulse count to calculate old count rate.	RW
0128	CH_CRIT	5.000E-04		Critical probability to evaluate count rate alterations (probability of wrong decision).	RW
012A	CRED_N	25		Minimum pulse count in sum to declare the count rate credible. Not evaluated if zero.	RW
012B	CRED_K	2.000E+00		Factor of maximum acceptable count rate alteration against previous value. Not evaluated if 1.	RW

Tab. 20 Measurement parameters

6.1.9 High voltage source

The high voltage source maintains voltage at the required value defined by parameter **HV_U_1** under normal situation. The source starts up to this value smoothly at a pace of 200 V/s. The actual output voltage and output current are measured and presented in parameters **HV_U_ACT_1** and **HV_I_ACT_1**.

If, under normal operation, the output current exceeds the value of **HV_I_MAX_1**, the HV source is immediately blocked. The source is unblocked after instrument restart or with the new writing of the value of the required voltage.

A summary of important parameters is given in the following tables.

ID	Parameter	Default value	Unit	Description	Rights
013D	HV_U_1	0	V	Required high voltage of HV power supply unit. At this voltage value the HV source stabilizes the output unless it is blocked by a command or overload.	RW
013E	HV_VAR_REL_1	4	%	Permitted relative deviation of high voltage, see HV_Status bits HVL and HVH.	RW
013F	HV_VAR_ABS_1	4	V	Permitted absolute deviation of high voltage, see HV_Status bits HVL and HVH.	RW
0140	HV_I_MIN_1	0.0	uA	Minimum acceptable current of the HV source. When this current value is not reached, a fault is signalled, see HV_Status bit 5.	RW
0141	HV_I_MAX_1	15.0	uA	Maximum permitted current. When this current value is exceeded, the HV source is blocked, see HV_Status bit HVCH.	RW
0142	DET_R_1	0.0	MΩ	Resistance of the detector divider (photomultiplier) of the HV source. Considered infinite if set to 0.	RW
0143	DET_I_OVL_1	50.0	uA	Current in the detector (photomultiplier) which, when breached, results in detector overload signalization, see HV_Status bit 6.	RW

Tab. 21 HV – important parameters

HV power source status

ID	Parameter	Default value	Unit	Description	Rights
0116	HV_STATUS_1			Status of HV source 1. For a description see below.	RO
0117	HV_TIME_1		min	Total run time of HV source 1.	RO
0119	HV_U_ACT_1		V	Measured high voltage at the output of HV source 1.	RO
011A	HV_I_ACT_1		uA	Measured output current flowing from HV source 1.	RO
011B	DET_I_1		uA	Calculated current through detector of HV source 1.	RO

Tab. 22 HW power source status

HV_STATUS_1		
HV power supply unit status. Interpretation is binary. Describes the present status of the HV source. If everything is OK, none of the bits is set.		
Bit	**Designation**	**Description**
0	HVB	HV source blocked by main command.
1	HVCH	HV source voltage will be changed. When changing the required voltage (for example after switching from 0 V to HV_U) the HV source changes its output voltage with a gradient of approx. 200 V/s.
2	HVL	HV source voltage is lower than required. Not set in case of HVB, HVCH lasting less than 30 s and HVOC. It is set if $HV_U_ACT \le HV_U \cdot \left(1 - \frac{HV_VAR_REL}{100}\right) - HV_VAR_ABS$.
3	HVH	HV source voltage is higher than required. Not set in case of HVB, HVCH lasting less than 30 s and HVOC. It is set if $HV_U_ACT \ge HV_U \cdot \left(1 + \frac{HV_VAR_REL}{100}\right) + HV_VAR_ABS$.
4	HVLC	Low output current of the HV source. Not set in case of HVB and HVCH, it is set if HV_Imeas < HV_IMin
5	HVHC	High output current of the HV source. The bit is set when HV_Idet ≥ HV_IdetOverload
6	HVOC	HV source blocked by current limitation. This bit is set at the HW level when any overload is detected, i.e. if the output current exceeds the permitted current (parameter HV_Imax). The HV source is unblocked and this bit reset when the instrument is switched off and from main command 10.
7-15		Always zero.

Tab. 23 HV – power supply status

6.1.10 Share of dead times

Channels 1 and 2 are compensated for dead time. Channel 1 also counts the time that the system spends in channel 2 with two-channel measurement. The share of dead times in the measurement time is still counted toward the detection of detector overload. If the values of shares exceed the parameters **DTR_MAX1** and **2**, the channel goes to overload.

Channel overload may also cause a breach of the maximum permitted count rate **RATE_MAX1** and **2**. In both cases the fifth bit of the measurement channel status, i.e. AMR is issued and the resulting value is prescribed at a value 20% higher than the value **RATE_MAX1** and **2**.

6.1.11 Cross-talk

When calculating the instrument's count rate it compensates cross-talk of channel 2 into channel 1. It is defined by the parameter **CROSSTALK** which specifies the share of net count rate (without background) of channel 2 to the net count rate of channel 1. Using this compensation is designed especially to compensate the cross-talk of alpha radiation measurement channel into the beta radiation measurement channel on surface contamination detectors.

Compensation of cross-talk from channel 1 into channel 2 is not implemented because it must be negligible for the requirements of standards for contamination measurement.

A summary of parameters is given in the following table.

ID	Parameter	Default value	Unit	Description	Rights
00DF	CROSSTALK	5.000E-01		Cross-talk from channel 2 into channel 1.	RW

Tab. 24 Crosstalk

6.1.12 Count rate measurement parameters

Count rate is calculated as floating average. The mean update interval is SP (usually 1 s).

The instrument allows measuring with a fixed or variable measurement time dependent on the count rate from the detector. If it is necessary to measure the count rate with a constant measurement time, set the minimum time **T_MIN** identically with the maximum time **T_MAX** to the desired time.

If the mentioned values are not the same, a window of variable times is created within which the instrument is located. Depending on the required pulse count **N_REQ** the reading time automatically increases for lower count rates and shortens for higher count rates. For default values specified below the time changes from 3 to 30 s.

A summary of parameters is given in the following table.

ID	Parameter	Default value	Unit	Description
011E	T_MIN	3.0	s	Minimum measurement time. Condition PERIOD/10 ≤ T_MIN ≤ T_MAX.
0120	T_MAX	30.0	s	Maximum measurement time. Condition PERIOD/10 ≤ T_MIN ≤ T_MAX.
0122	N_REQ	1,000		Required pulse count.

Tab. 25 Count rate measurement parameters

6.1.13 Count rate change detection algorithm

For quick response to distinct count rate changes, the algorithm described in 0 may also depend on a change of pulse count rate. If you do not want to use the change detection algorithm, set the time **ZC_TA (ZC_TB)** to 0.

The time of reading new incoming pulses is defined by parameters **CH_T**. The algorithm compares the number of new incoming pulses with the number of pulses read before. If a difference is identified between old and new pulses, all pulses older than **T_MIN** will be discarded. The probability of decision error equals the parameter **CH_CRIT**. The decision is contingent upon a sufficient number of older pulses defined by the parameter **CH_N_MIN**.

If the measurement interval is shorter than 0.5 s (the parameter PERIOD is lower than 5), the count rate change detection algorithm is blocked due to reasons of a limited computational performance of the instrument.

ID	Parameter	Default value	Unit	Description	Rights
011E	T_MIN	3.0	s	Minimum measurement time. Condition PERIOD/10 ≤ T_MIN ≤ T_MAX.	RW
0120	T_MAX	30.0	s	Maximum measurement time. Condition PERIOD/10 ≤ T_MIN ≤ T_MAX.	RW
0122	N_REQ	1,000		Required pulse count.	RW
0124	CH_T	0.0	s	Measurement time to evaluate count rate alterations. No evaluation if zero.	RW
0126	CH_N_MIN	100		Minimum pulse count to calculate old count rate.	RW
0128	CH_CRIT	5.000E-04		Critical probability to evaluate count rate alterations (probability of wrong decision).	RW
012A	CRED_N	25		Minimum pulse count in sum to declare the count rate credible. Not evaluated if zero.	RW
012B	CRED_K	2.000E+00		Factor of maximum acceptable count rate alteration against previous value. Not evaluated if 1.	RW

Tab. 26 Count rate change detection alhorithm

6.1.14 Conversion presets

There is room for ten presents for converting the count rate to different quantities or radionuclides in the instrument. It is an array of ten parameters.

The structure of a single entry is PRESET_TABLE

ID	Parameter	Default value	Unit	Description	Rights
0165	PRESET_CFG_1	Not Valid		Preset configuration. Description below.	RW
0166	PRESET_NAME_1			Name - preset description	RW
016E	PRESET_PQ_1	-		Quantity enumerator	RW
016F	PRESET_UNIT_1	-		Unit enumerator. Description below.	RW
0170	PRESET_RF_1	1.000E+00	UNIT/cps	Conversion factor	RW
0172	PRESET_OFFSET_1	0	UNIT	Offset	RW
0174	PRESET_LLMR_1	-INF	UNIT	Lower limit of the measurement range (-INF = uses common)	RW
0176	PRESET_ULMR_1	INF	UNIT	Upper limit of the measurement range (INF = uses common)	RW
0178	PRESET_TLL1_1	-INF	UNIT	Threshold of lower alarm level 1	RW
017A	PRESET_TLL2_1	-INF	UNIT	Threshold of lower alarm level 2	RW
017C	PRESET_TUL1_1	INF	UNIT	Threshold of upper alarm level 1	RW
017E	PRESET_TUL2_1	INF	UNIT	Threshold of upper alarm level 2	RW

Tab. 27 Single entry structure

PRESET_CFG_1		
Preset configuration.		
Bit	**Description**	**Operation**
0	Preset validity, 0-invalid, 1-valid.	RW
1	Defines affiliation with channel 1.	RW
2	Defines affiliation with channel 2.	RW
other	Always zero.	RW

Tab. 28 Preset configuration

PRESET_PQ_1	
Quantity enumerator.	
Value	**Unit**
0	countrate
1	activity
2	Surface activity

Tab. 29 Quantity enumerator

PRESET_UNIT_1	
Unit enumerators.	
Value	**Unit**
0	cps
1	cpm
2	Bq
3	Bq/cm^2
4	Bq/m^3
5	Gy/h
6	Sv/h
7	R/h
8	dpm

Tab. 30 Unit enumerator

6.1.15 Recording in non-volatile memory and main commands

After instrument start-up all parameters are read from the non-volatile memory into RAM. All activities, including parameter changes, only take place in RAM. After restart the instrument always restores to the status stored in the non-volatile memory.

Storing parameters in the instrument's permanent memory is carried out using the VF-Setup service application, the Commands key. This key also provides access to key available functions for the specific selected XML.

Note: Entries for permanent storage are made in the VF-Setup application also automatically, e.g. when saving high voltage in the part for measuring the detector plateau.

Code	Description	Parameter
1	Instrument reset.	
2	Load settings from permanent memory.	
6	Save settings in permanent memory.	
8	Blocking HV power sources. It remembers the status permanently. Unblocking also resets HW protection.	uint16 15 – block all HV power sources 2 – block HV source 2 1 – block HV source 1 0 – unblock all HV sources
9	Automatic transmission of data. It starts and end automatic data transmission; the data are sent automatically after generation. If the request is permanent, the status is automatically saved in the permanent memory and is valid even after instrument restart. If the request is temporary, the status saved in permanent memory is effective after instrument restart.	uint16 0 – do not send data permanently 1 – send data permanently 2 – do not send data temporarily 3 – send data temporarily
10000	Control of measurement of mean count rates in all available channels.	uint16 0 – reset 1 – start 2 – stop
10001	Control of integration count rate measurement in all available channels.	uint16 0 – reset 1 – start 2 – stop
10002	Set the integration time INT_T_MAX.	uint32 value [ms]
10003	Set the required pulse count for integration INT_N_REQ.	uint32 value [cps]
10005	LED control.	uint16 0 – switched off 1 – red on 2 – red flashing 3 – green on 4 – green flashing
20000	Loads default values in RAM.	

Tab. 31 Recording in non-volatile memory and main commands

7. Maintenance and care

Preventive maintenance may only be performed by workers assigned for this purpose, older than 18 years of age, demonstrably trained for the appropriate type of work and familiarised with the Instructions for Use, which must be kept in an accessible place.

- Carry out the visual inspection of the instrument and check the measured background. When increased number of background pulses is measured, it is probably because of broken light-tight aluminium foil or contamination.

7.1. Annual maintenance

RECOMMENDATIONS OF MANUFACTURER - Verify the operation of instrument with the certified EZ type IZ planar source.

7.2. Metrological traceability

- The instrument is calibrated according to standards, see section 0.
- The primary configuration and calibration are carried out by the manufacturer.
- The configuration is performed either by the manufacturer, a trained service organization or the user's staff trained by the manufacturer according to the relevant operating regulation.

If you use instrument in assembly as type-approved monitor, it is necessary to carry out its metrological verification.

To maintain the values of the set metrological parameters in the course of time, do not leave the instrument switched off for longer than 3 months[1].

MANUFACTURER'S RECOMMENDATION – Carry out calibration at least once in 2 years.

[1]If the period of inactivity is longer, switch the instrument on for several hours before use and monitor the stability of the measured quantity response. Once stability is achieved, the instrument is ready for use.

7.3. Photomultiplier (PMT) life cycle

Photomultiplier is an electrical component that can detect very weak light signals, usually in the range (295 ÷ 630) nm.

Fig. 7 Photomultiplier

When a photon impacts on a sensitive photocathode, the photoelectric effect results in the emission of electrons, which are gradually accelerated by the electric voltage between the individual electrodes (dynodes). The impact of accelerated electrons on the dynodes gives rise to the emission of a larger quantity of electrons (secondary emission), resulting in an amplification of the electron current colliding with the anode.

PMT stability in time depends both on the anode current as well as on photocathode and dynodes material. The time dependence is a routine matter, i.e. the photomultipliers should be sorted for selected applications. Each PMT is in VF tested and assessed whether or not its parameters meet the expected requirements. PMT testing and stabilization take usually 48 hours. The chart shows typical dependence of anode current in time. The detectors manufactured by our company have anode current < 1 microampere, i.e. very long time stability. When the photomultiplier is not used for several months, its properties can return into the state before seasoning.

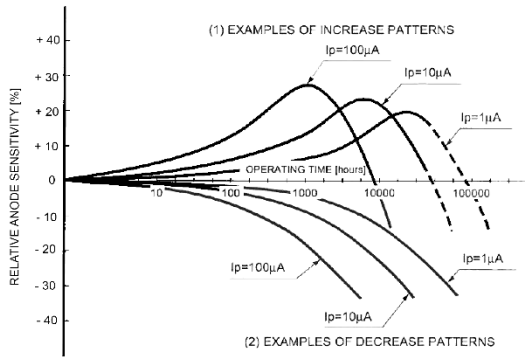

The photomultiplier is a very sensitive component composed of a large amount of small components, which are connected by soldering. If the PMT is exposed to shocks, it can cause failure to the integrity of mechanical parts, thus changing the parameters of the photomultiplier. Mechanical failures of the PMT manifest themselves by sparkling, i.e. increase in pulse rate, which occurs after the instrument is switched on. An opposite effect, i.e. decrease or loss of PMT response, can occur as a result of loss of vacuum.

Fig. 8 Typical dependence of anode current of the photomultiplier in time

MANUFACTURER'S RECOMMENDATION – In case of a drift or response instability of measured quantity, contact the partner service organization.

8. Troubleshooting

No.	Failure	Possible causes	Corrective measures
1.	Increased pulse count	• Damage to the light-tight aluminium foil	• Replace the foil with the frame • Contact the service organization
2.	Zero pulse count	• Damage to the light-tight foil caused the activation of the overcurrent fuse and the subsequent switching the HV source off. • Photomultiplier failure	• Check the HV power supply status, see 6.1.9 • Replace the foil with the frame • Contact the service organization
3.	Instrument not communicating	• The detector is not power supplied • The detector has different communication parameters set than expected • Defective connecting cable.	• Restore power supply of detector • Set communication parameters, see 0 • Replace connecting cable. • Contact the service organization

Tab. 32 Overview of most frequent failures

8.1. High background level

Instrument for measuring of surface contamination continuously evaluate whether they are able to detect the required surface activity corresponding to the surface activity alarm. In case the background response exceeds the limit at which the instrument is unable to detect the desired value of surface activity, it is probably due to high background level at the location of instrument. It may also be the instrument contamination or its damage.

8.2. Possible detector contamination

This state is signalled if the permitted background level is exceeded when the previous measurement ended with a contamination finding. In such a case, the detector must be decontaminated or replaced (the light-tight aluminium foil could be damaged). The instrument is in "Out of service" state and servicing is required.

Decontaminate only a switched-off instrument with the supply cable unplugged.

- Manual probe can be decontaminated using standard decontamination solutions.
- Wipe gently the manual probe cover grid with a damp (not wet) cloth dipped in a decontamination solution.
- If contamination is not removed in step one, disassemble the manual probe, remove carefully the cover grid and decontaminate the grid and manual probe body outside the instrument.

ATTENTION – The top light-tight aluminium foil is very prone to mechanical damage, therefore do not touch it with your hand or any other objects.

- If you suspect contamination of the manual probe cover aluminium foil, replace the frame with the foil.

9. Scope of supply

9.1. Standard delivery parts

Item specification		Nomenclature (VF order number)	Quantity
1.	Frisking probe SFP-100x	According to ordered	1 pc
2.	FP-100 detector cover	53-P-0013071	1 pc

Tab. 33 Standard delivery parts

9.2. Accessories, additional equipment and associated products delivered separately

Item specification		Nomenclature (VF order number)	Quantity
1.	USB cable – 6 pin	51-A-0000242	1 pc
2.	Service SW, VF-Setup	53-A-0000006	1 pc

Tab. 34 Accessories, additional equipment and associated products delivered separately

9.3. Consumable materials

Item specification		Nomenclature (VF order number)	Quantity
1.	-	-	-

Tab. 35 Consumable materials

10. Warranty conditions

The warranty applies to all faults caused by material defects or by instrument malfunction. The warranty is subject to adherence to the Instructions for Use and to the performance of maintenance and care of the instrument without making any changes in the structure of the instrument. During the warranty period the manufacturer guarantees a free-of-charge repair under the following conditions:

- the claim is filed for faults occurring during the warranty period and within 15 days of expiry of the warranty period at the latest
- the product was used in accordance with the manufacturer's recommendations
- the product is complete, including the confirmed warranty certificate
- warranty inspections have been performed by the service organization according to conditions agreed in the order (purchase contract)

The user shall not fix product faults occurring during the warranty period but shall report them to the supplier, who will provide for their remedy within the agreed period of time. The warranty does not apply to the natural wear of parts and to faults resulting from mechanical damage, overloading, unprofessional installation, handling, or use of instrument other than as intended, or from natural disasters.

The supplier is not responsible for damage caused to persons, animals or things as a direct consequence of non-observance of the recommendations stated in the Instructions for Use.

The product cannot be fixed free of charge under the warranty:

- if the method of use and maintenance of the product stated in the Instructions for Use is not observed
- in case of damage and faults resulting from unprofessional and inappropriate installation of the product, use of inappropriate sources and installations not conforming to technical regulations
- in case of any repairs, product modifications, changes or settings not authorized by the manufacturer in advance
- in case of faults caused by natural disasters
- in case of any instrument use other than as intended
- in case of damage obviously resulting from the use of incorrect voltage, short circuits or instability of the supply network
- after a previous repair performed by an unauthorized service partner
- upon damage to components such as handles, glass, control switches, etc., resulting from their functional wear
- in case of changes of color of plastic components (it is a common physical and chemical phenomenon occurring after some time of use)
- in case of faults resulting from improper handling or treatment
- in case that an unauthorized person interferes with the product
- a failure of the light-tight foil is not covered by the warranty

Other warranty conditions are individually agreed in the delivery terms and conditions. Submit any claims under the warranty by post to the manufacturer's address or by email to the address **servis@vf.cz**, and give a description of the defect.

Contact Details

The instrument is supplied and post-warranty services are provided by:		Contact details of the service partner:
	Czech Republic: VF, a.s., Svitavská 588, 679 21 Černá Hora Tel.: +420 516 42 86 11, Fax: +420 516 42 86 10 email: info@vf.cz, www.vf.cz	

11. Annexes

Annex A. Graphs of dependence of alarm setting on background

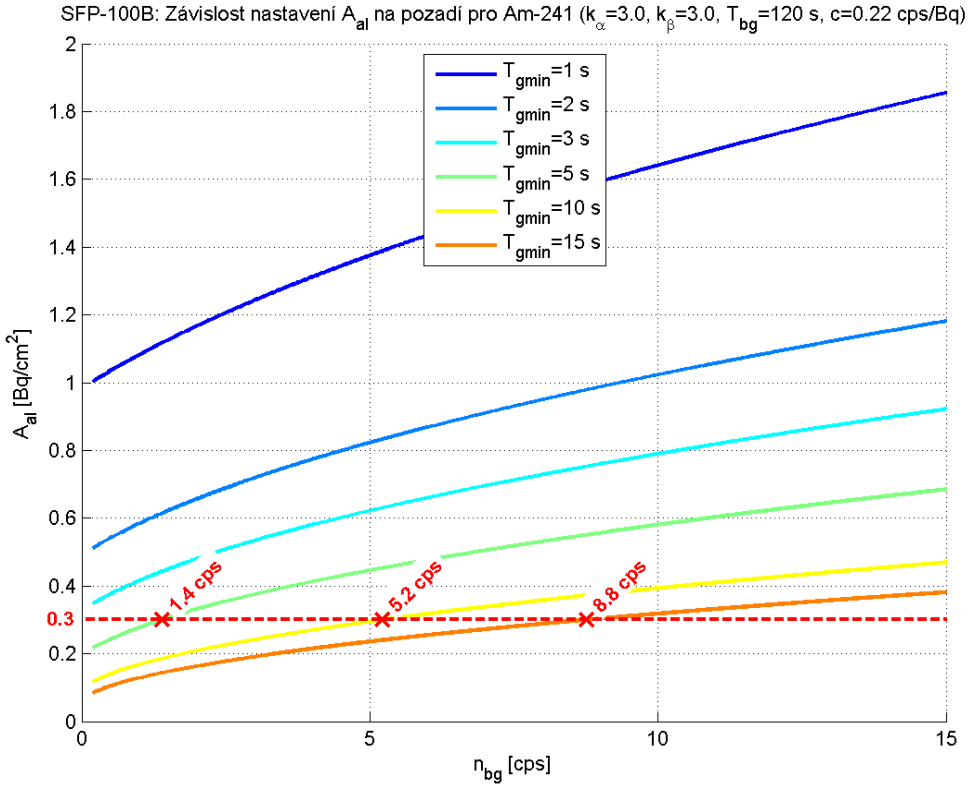

SFP-100B: Závislost nastavení A_{al} na pozadí pro Am-241 (k_α=3.0, k_β=3.0, T_{bg}=120 s, c=0.22 cps/Bq)	SFP-100B: Dependence of setting A_{al} on the background for Am-241 (k_α=3.0, k_β=3.0, T_{bg}=120 s, c=0.22 cps/Bq)

A_{al}	Alarm level [Bq/cm^2]
n_{bg}	Count rate from background [cps]
k_α	Coverage factor for error of the first kind
k_β	Coverage factor for error of the second kind
T_{bg}	Maximum background measurement time [s]
T_{gmin}	Minimum contamination measurement time = measurement initialization time [s]
c	Channel sensitivity to IR reference source [cps/Bq]

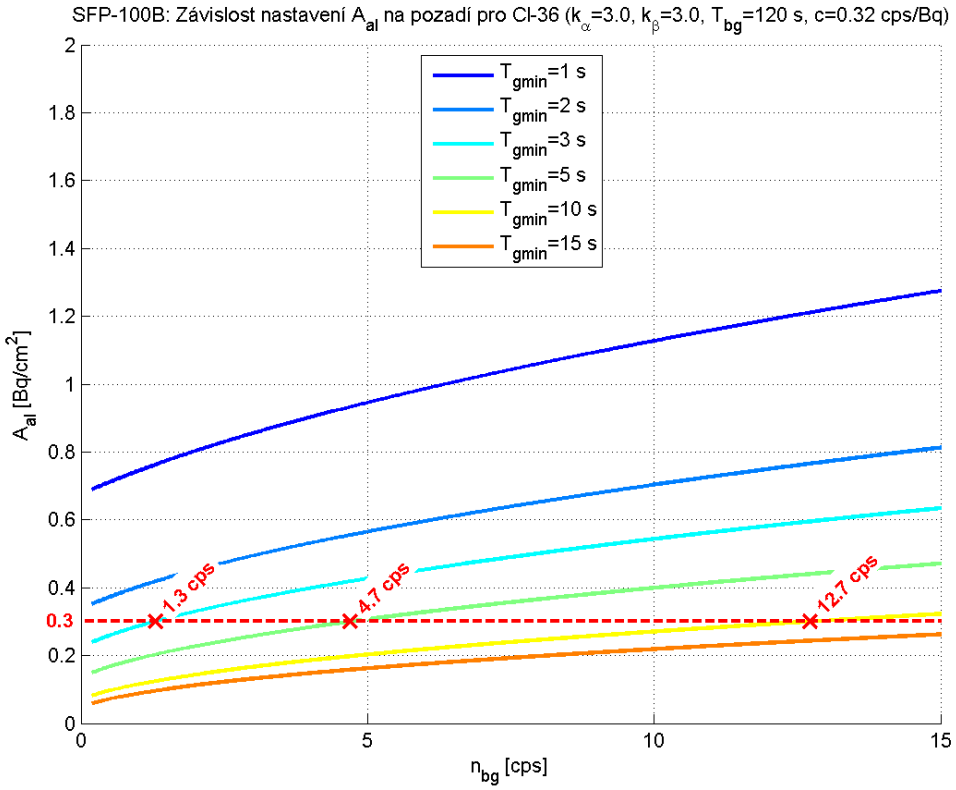

SFP-100B: Závislost nastavení A_{al} na pozadí pro Cl-36 (k_α=3.0, k_β=3.0, T_{bg}=120 s, c=0.32 cps/Bq)	SFP-100B: Dependence of setting A_{al} on the background for Cl-36 (k_α=3.0, k_β=3.0, T_{bg}=120 s, c=0.32 cps/Bq)

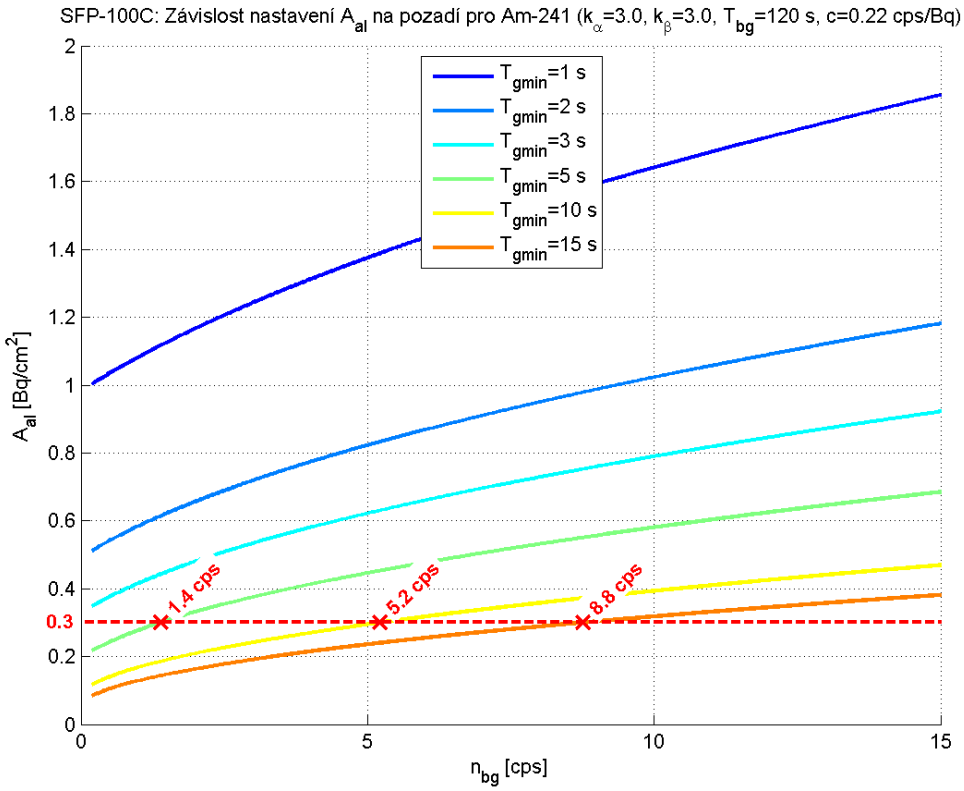

SFP-100C: Závislost nastavení A_{al} na pozadí pro Am-241 (k_α=3.0, k_β=3.0, T_{bg}=120 s, c=0.22 cps/Bq)	SFP-100C: Dependence of setting A_{al} on the background for Am-241 (k_α=3.0, k_β=3.0, T_{bg}=120 s, c=0.22 cps/Bq)

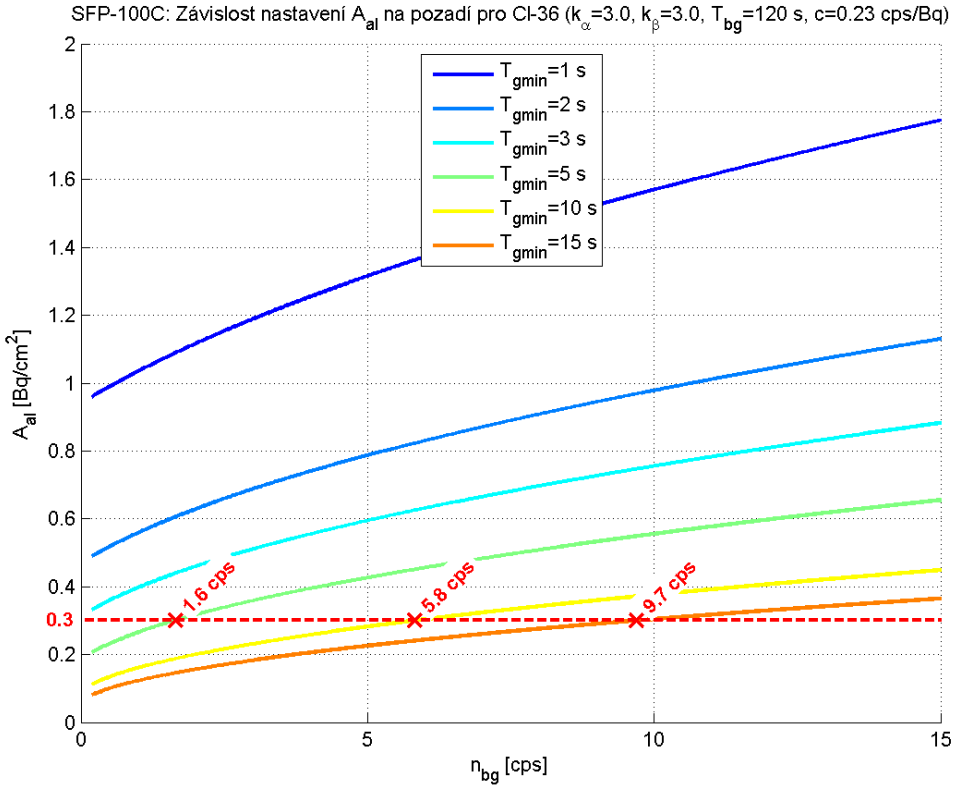

SFP-100C: Závislost nastavení A_{al} na pozadí pro Cl-36 (k_α=3.0, k_β=3.0, T_{bg}=120 s, c=0.23 cps/Bq)	SFP-100C: Dependence of setting A_{al} on the background for Cl-36 (k_α=3.0, k_β=3.0, T_{bg}=120 s, c=0.23 cps/Bq)

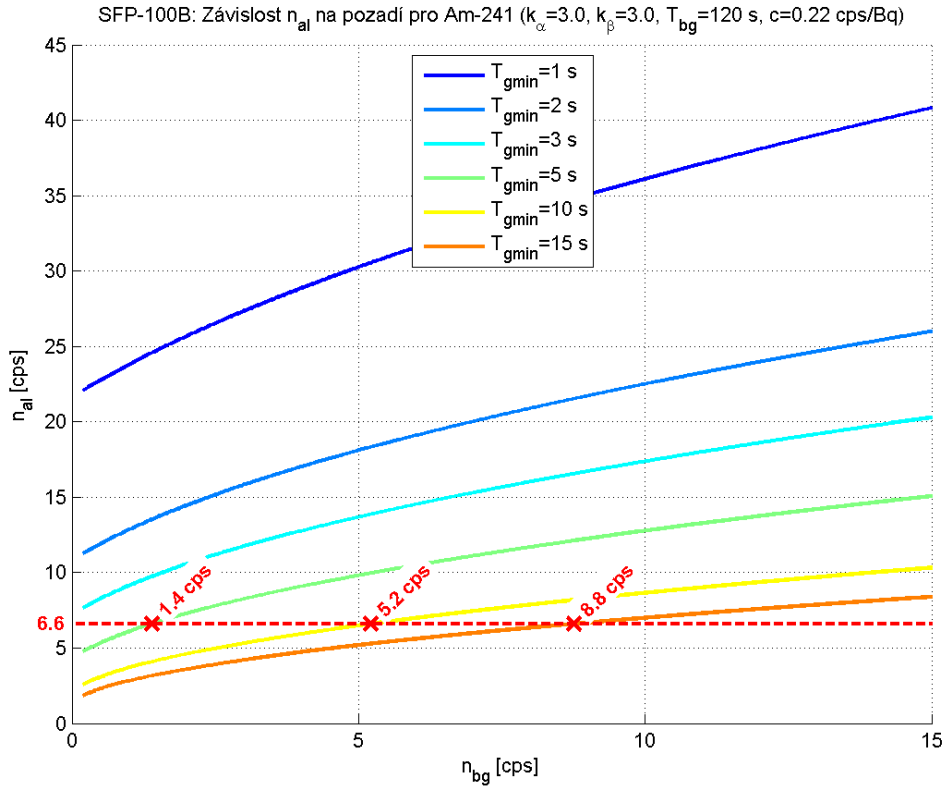

SFP-100B: Závislost n_{al} na pozadí pro Am-241 (k_α=3.0, k_β=3.0, T_{bg}=120 s, c=0.22 cps/Bq)	SFP-100B: Dependence of n_{al} on the background for Am-241 (k_α=3.0, k_β=3.0, T_{bg}=120 s, c=0.22 cps/Bq)

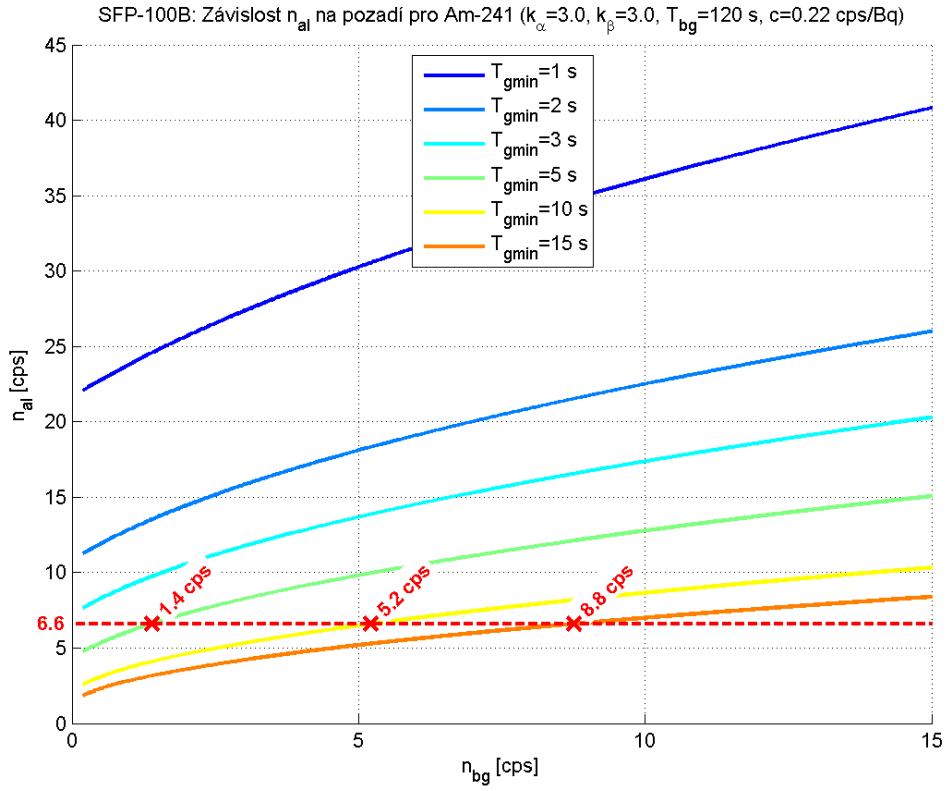

SFP-100B: Závislost n_{al} na pozadí pro Am-241 (k_α=3.0, k_β=3.0, T_{bg}=120 s, c=0.22 cps/Bq)	SFP-100B: Dependence of n_{al} on the background for Am-241 (k_α=3.0, k_β=3.0, T_{bg}=120 s, c=0.22 cps/Bq)

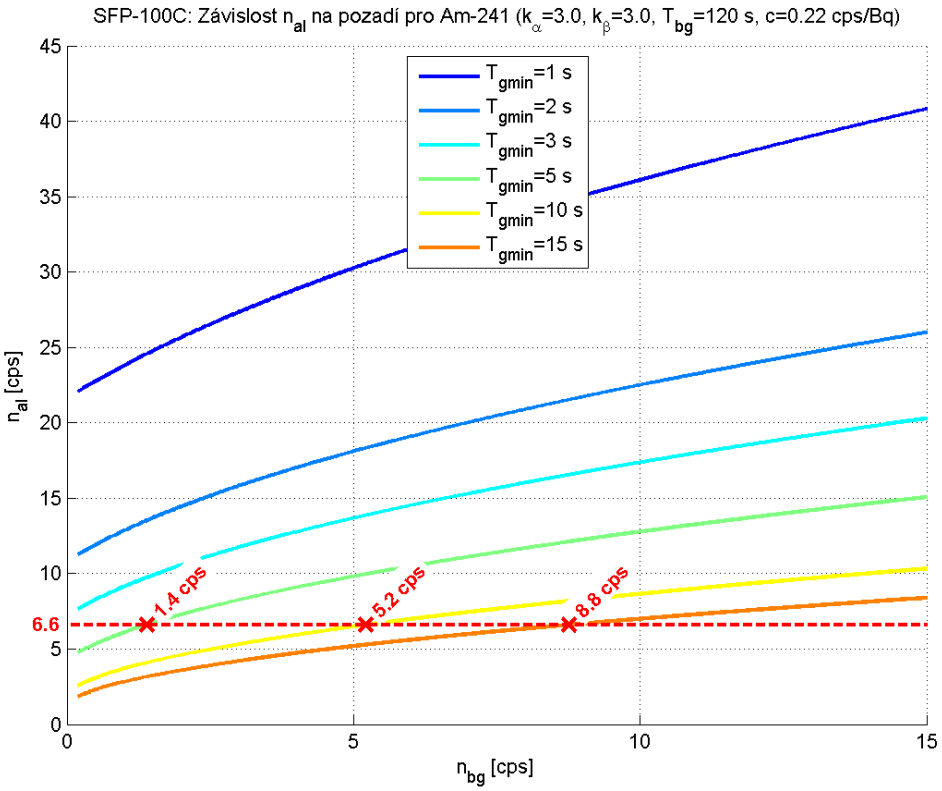

SFP-100C: Závislost n_{al} na pozadí pro Am-241 (k_α=3.0, k_β=3.0, T_{bg}=120 s, c=0.22 cps/Bq)	SFP-100C: Dependence of n_{al} on the background for Am-241 (k_α=3.0, k_β=3.0, T_{bg}=120 s, c=0.22 cps/Bq)

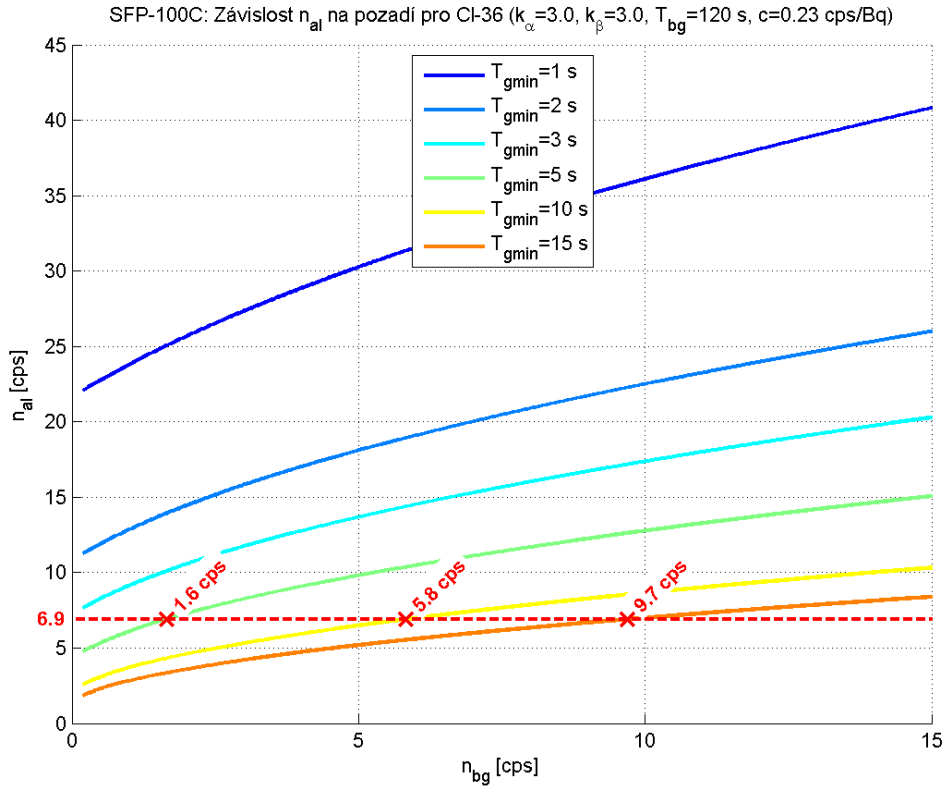

SFP-100C: Závislost n_{al} na pozadí pro Cl-36 (k_α=3.0, k_β=3.0, T_{bg}=120 s, c=0.23 cps/Bq)	SFP-100C: Dependence of n_{al} on the background for Cl-36 (k_α=3.0, k_β=3.0, T_{bg}=120 s, c=0.23 cps/Bq)

Notes